TOP TECH

PLATO-R SERIES

Air-Pressure Grinding & Polishing

50dB
Silent Type

Perfect Surface. Always

P20G-1-R6 series

Patent

- 7” HMI touch panel
- Individual force (Standard)
- Individual micro force (Optional)
- Central force (Optional)
- Variable rotational speed and adjustable rotational direction for platen and head
- 10 memory modes for recording application parameters
- Automatic and programmable dispenser (Optional)

TOP TECH

Introduction & Feature

Multi-functional control panel
It is equipped with a high-quality color touch panel, intuitive human-machine interface, and 10 modules of parameter memory function.

Rotational speed of the head is adjustable
The grinding head is equipped with brushless motor with rotation speed from 10~170rpm.

Automatic drying function
The automatic drying function makes the cleaning process more fast. Also, avoiding the cross contamination during the operating process.

Overload protection
When the total force is more than the default setting during operation, the machine will stop automatically.

Low speed grinding and polishing function
Rotational speed can be lowered to 1 rpm. With external dispenser (optional), it meets the requirement of long-time polishing process without deformation.

Dispenser (Optional)
Users can control the dispenser by setting up the parameters on control panel.

Sample Pistons
Sample pistons will lower down lightly to prevent the surface of the specimen from damage.

TOP TECH

Modular design
The combined control box can be fixed behind the machine or be placed next to the machine with quick-change design, which is easy to maintenance and can maximize the space.

Individual pressure
Pressing force is between 0.5~6kg. The suggested pressure and amount of samples are marked on the grinding head.

Individual micro force (Optional)
Pressing force is between 0.2~1kg. Suitable for the specimen, requiring the micro force pressing during grinding/polishing.

Central force (Optional)
Pressing force is between 3~12 kg. Quick-released sample holder simplifies the leveling process and cleaning process.

Superior industrial plastic body

Exquisite Appearance
Streamline appearance design and glossy film surface finishing makes the mechanical appearance artistic and exquisite.

Various choices of platen
Platens with size 8” and 10“ are suitable for any kinds of consumables .

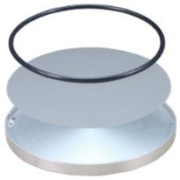

Telescopic water hose and air pressure gun
The machine can be cleaned conveniently.

Various Anti-splash application
Various anti-splash covers can be applied based on the method of polishing process.

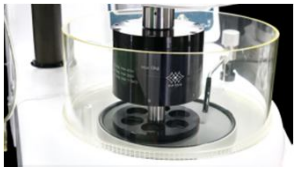

TOP TECH

Accessories (Optional)

Item	Order No.
Dispenser Set	P20F0030
Dropping Bottle	Y09006

Grinding Platen

Polishing Platen

Magnetic Platen and Paper Hold

Item	Size	Order No.
Grinding Platen (Patent)	8”	CP0601
	10”	CP0602
Polishing Platen	8”	P20D00020101
	10”	P25A00010201
Magnetic Platen and Paper Hold (Patent)	8”	CP0501
	10”	CP0502

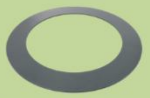

Anti-Splash Cover (Manual)

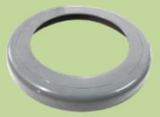

Anti-Splash Cover (Auto)

Anti-Splash Cover (Full Cover)

Item	Size	Order No.
Anti-Splash Cover (Manual)	8”	PA0108-1
	10”	PA0108
Anti-Splash Cover (Auto)	8”	PA0108-3
	10”	PA0108-4
Anti-Splash Cover (Full Cover)	-	PA0108-2

Item	Size	Order No.
Magnetic	8”	S080101
	10”	S080102

TOP TECH

Item	Size	Order No.
Carrier Plate	8”	S090101
	10”	S090102

Precise Light Force (0.2~1kg)

Size (mm)	Sample Quantity	Order No.
Ø25	6	PA1-D2-625
Ø25.4	6	PA1-D2-625.4
Ø31.75	6	PA1-D2-631.75
Ø32	6	PA1-D2-632
Ø38.1	3	PA1-D2-338.1
Ø40	3	PA1-D2-340
Platen 250mm only		
Ø38.1	4	PA1-D2-438.1
Ø40	4	PA1-D2-440
Ø50	4	PA1-D2-450

Central Force (3~12kg)

Size (mm)	Sample Quantity	Order No.
Ø25	6	PA1-D3-625
Ø25.4	6	PA1-D3-625.4
Ø31.75	6	PA1-D3-631.75
Ø32	6	PA1-D3-632
Ø38.1	3	PA1-D3-338.1
Ø40	3	PA1-D3-340
Platen 250mm only		
Ø38.1	4	PA1-D3-438.1
Ø40	4	PA1-D3-440
Ø50	4	PA1-D3-450

TOP TECH

Working Table (Optional)

	TF01	TF02
size(L*W*H)	1000*800*700 mm	1200*1000*700 mm

Sample

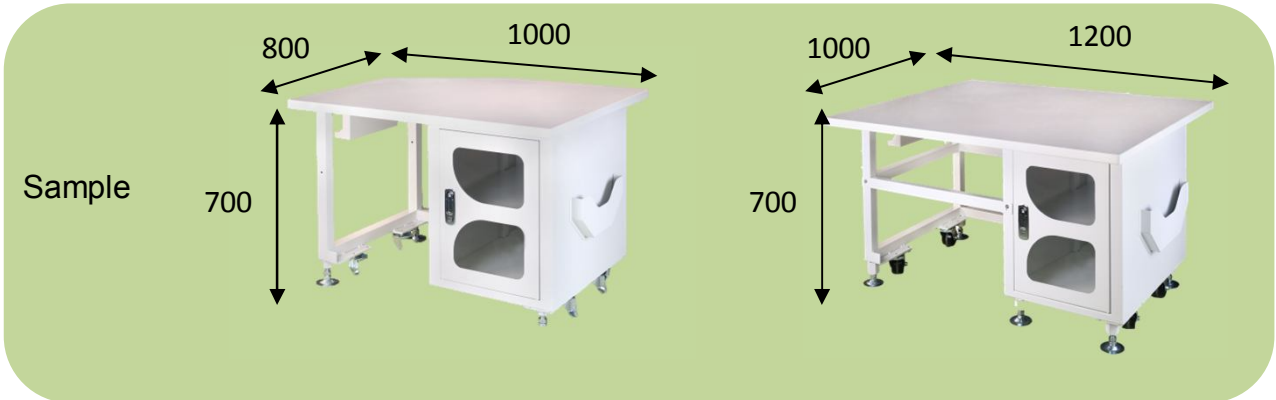

(mm)

TOP TECH

Specifications

Model	P20G-1-R6	P20G-1-R3	P25G-1-R6	P25G-1-R3	P25G-1-R4
Platen Size (mm)	Ø203.2 (8")		Ø254 (10")		
Platen Quantity	1				
Sample Size / Quantity	Ø25mm, Ø25.4mm, Ø31.75mm, Ø32mm/ 6pcs Ø38.1mm,Ø40mm/3pcs		Ø25mm, Ø25.4mm, Ø31.75mm, Ø32mm /6pcs Ø38.1mm, Ø40mm/3 or 4pcs Ø50mm/4pcs		
Individual Force Max. Grinding Quantity	0.5~2kg 6 pcs,		0.5~4kg 3 pcs,		0.5~6kg 2 pcs,
	Max. 12kg in total				
Precision Individual Micro Force (kg)	0.2~1 (Optional)				
Central Force (kg)	3~12 (Optional)				
Platen Motor Power (W)	400				
Platen Rotational Speed (rpm)	1~600				
Head Motor Power (W)	50				
Head Rotational Speed (rpm)	10~170				
Timer	1~360000s (Max. 6000mins)				
Machine Dimension WxDxH (mm)	650x670x675				
Machine Weight (kg) AC110V 1Ø	73		74		
Machine Weight (kg) AC220V 1Ø	63		64		
Standard Accessories	Polishing Platen 1pc, Anti-Splash Cover 2pcs, Silicon Carbide Paper 8pcs, Polishing Cloth 2pcs, Aluminum Oxide Powder 100g, Filter 1set, PU Pipes 6 m, Dispenser 1pc, Air Pressure Gun 1set				
Option	P20F0030 Dispenser Set, PA0108-1 8" Anti-Splash Cover (Manual), PA0108 10" Anti-Splash Cover (Manual), PA0108-3 8" Anti-Splash Cover (Auto), PA0108-4 10" Anti-Splash Cover (Auto), PA0108-2 Anti-Splash Cover (Full-Cover)				

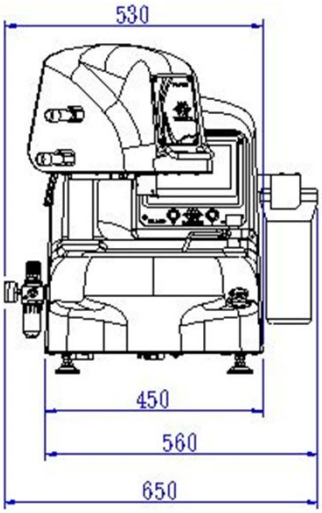

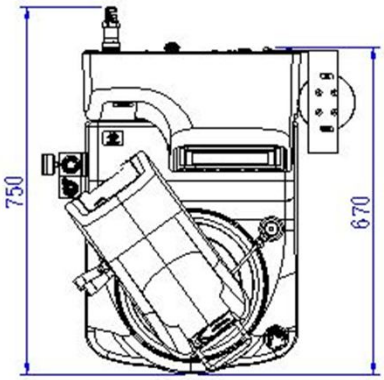

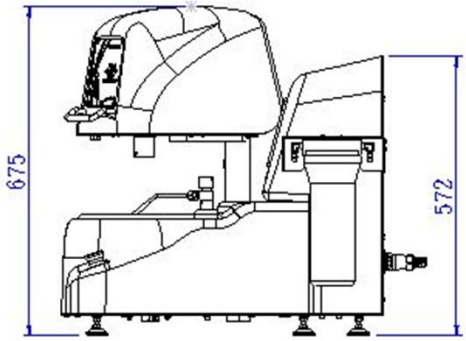

TOP TECH

Consumables (Optional)

Diamond Disc

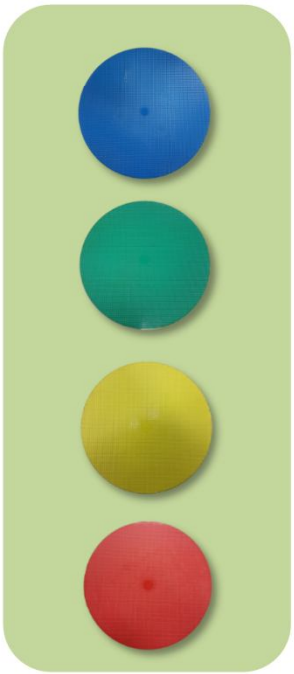

Order no.	size	Magnetic Pad	Pack(pcs/box)
Disc no.1	Equivalent to the grinder paper #120		
SAA09CA54020	8”(200mm)	●	1
SAA09CA54040	10”(250mm)	●	1
Disc no.2	Equivalent to the grinder paper #240		
SAA09CA55020	8”(200mm)	●	1
SAA09CA55040	10”(250mm)	●	1
Disc no.3	Equivalent to the grinder paper #600		
SAA09CA56020	8”(200mm)	●	1
SAA09CA56040	10”(250mm)	●	1
Disc no.4	Equivalent to the grinder paper #1200		
SAA09CA58020	8”(200mm)	●	1
SAA09CA58040	10”(250mm)	●	1

FEPA Grinding Paper (Plain Back)

	Size	Grits	Pack(pcs/box)
Order no.	SiC Paper (Plain Back)		
S0520002-1	8”(200mm)	P80	100
S0520003-1	8”(200mm)	P100	100
S0520004-1	8”(200mm)	P120	100
S0520005-1	8”(200mm)	P150	100
S0520006-1	8”(200mm)	P180	100
S0520007-1	8”(200mm)	P240	100
S0520008-1	8”(200mm)	P320	100
S0520009-1	8”(200mm)	P400	100
S0520010-1	8”(200mm)	P600	100
S0520011-1	8”(200mm)	P800	100
S0520012-1	8”(200mm)	P1000	100
S0520013-1	8”(200mm)	P1200	100
S0520014-1	8”(200mm)	P1500	100
S0520015-1	8”(200mm)	P2000	100

TOP TECH

FEPA Grinding Paper (Plain Back)

Order no.	SiC Paper (Plain Back)		
S0525002-1	10”(250mm)	P80	100
S0525003-1	10”(250mm)	P100	100
S0525006-1	10”(250mm)	P180	100
S0525007-1	10”(250mm)	P240	100
S0525008-1	10”(250mm)	P320	100
S0525009-1	10”(250mm)	P400	100
S0525010-1	10”(250mm)	P600	100
S0525011-1	10”(250mm)	P800	100
S0525012-1	10”(250mm)	P1000	100
S0525013-1	10”(250mm)	P1200	100
S0525014-1	10”(250mm)	P1500	100
S0525015-1	10”(250mm)	P2000	100

ANSI Grinding Paper (Plain Back)

	size	Grits	pack(pcs/box)
Order no.	SiC Paper (Plain Back)		
S0520080060AU-1	8”(200mm)	#60	100
S0520080120AU-1	8”(200mm)	#120	100
S0520080180AU-1	8”(200mm)	#180	100
S0520080240AU-1	8”(200mm)	#240	100
S0520080320AU-1	8”(200mm)	#320	100
S0520080400AU-1	8”(200mm)	#400	100
S0520080600AU-1	8”(200mm)	#600	100
S0520080800AU-1	8”(200mm)	#800	100
S0520081000AU-1	8”(200mm)	#1000	100
S0520081200AU-1	8”(200mm)	#1200	100

TOP TECH

ANSI Grinding Paper (Plain Back)

	size	Grits	pack(pcs/box)
Order no.	SiC Paper (Plain Back)		
S0525100060AU-1	10”(255mm)	#60	100
S0525100120AU-1	10”(255mm)	#120	100
S0525100180AU-1	10”(255mm)	#180	100
S0525100240AU-1	10”(255mm)	#240	100
S0525100320AU-1	10”(255mm)	#320	100
S0525100400AU-1	10”(255mm)	#400	100
S0525100600AU-1	10”(255mm)	#600	100
S0525100800AU-1	10”(255mm)	#800	100
S0525101000AU-1	10”(255mm)	#1000	100
S0525101200AU-1	10”(255mm)	#1200	100

FEPA Grinding Paper (PSA Back)

	size	Grits	pack(pcs/box)
Order no.	SiC Paper (PSA Back)		
S05A20006-1	8”(200mm)	P180	100
S05A20007-1	8”(200mm)	P240	100
S05A20008-1	8”(200mm)	P320	100
S05A20009-1	8”(200mm)	P400	100
S05A20010-1	8”(200mm)	P600	100
S05A20011-1	8”(200mm)	P800	100
S05A20012-1	8”(200mm)	P1000	100
S05A20013-1	8”(200mm)	P1200	100
S05A20014-1	8”(200mm)	P1500	100
S05A20015-1	8”(200mm)	P2000	100

TOP TECH

FEPA Grinding Paper (PSA Back)

	size	Grits	pack(pcs/box)
Order no.	SiC Paper (PSA Back)		
S05A25006-1	10"(250mm)	P180	100
S05A25007-1	10"(250mm)	P240	100
S05A25008-1	10"(250mm)	P320	100
S05A25009-1	10"(250mm)	P400	100
S05A25010-1	10"(250mm)	P600	100
S05A25011-1	10"(250mm)	P800	100
S05A25012-1	10"(250mm)	P1000	100
S05A25013-1	10"(250mm)	P1200	100
S05A25014-1	10"(250mm)	P1500	100
S05A25015-1	10"(250mm)	P2000	100

Oxide Powder

Order no.	Aluminum oxide powder	
S0701010102	0.05um	1 lb
S07010201	0.3um	1 lb
S07010211	0.3um	2 lb
S07010301	1um	1 lb
S07010311	1um	2 lb
S07010401	3um	1 lb
S07011201	5um	1 lb

Order no.	Magnesium oxide powder	
S0705030102	1um	1 lb

Order no.	Zirconium oxide powder	
S07061009	0.5um	1 lb
S07061109	1.5um	1 lb

TOP TECH

Polishing Cloth

Order no.	Nylon Polishing cloth for plane and medium polishing of all materials, such as copper, steel, and alloy		Pack(pcs/box)
S060101-1	8”	(200mm)	10
S060102-1	10”	(250mm)	10

Order no.	PolyPad Polishing cloth for plane and medium polishing of metals, such as stainless steel, hard steel		Pack(pcs/box)
S060201-1	8”	(200mm)	10
S060202-1	10”	(250mm)	10

Order no.	Pellon Polishing cloth for medium polishing of steel, composite material and rock		Pack(pcs/box)
S060301-1	8”	(200mm)	10
S060302-1	10”	(250mm)	10

Order no.	Non-Woven Polishing cloth for medium polishing of soft metals, such as copper and aluminum		Pack(pcs/box)
S060401-1	8”	(200mm)	10
S060402-1	10”	(250mm)	10

Order no.	MicroPad Polishing cloth for medium polishing of all materials, such as aluminum and soft steel		Pack(pcs/box)
S060501-1	8”	(200mm)	10
S060502-1	10”	(250mm)	10

TOP TECH

Polishing Cloth

Order no.	PolyChem Polishing cloth for fine polishing of electronic components and glass		Pack(pcs/box)
S060601-1	8”	(200mm)	10
S060602-1	10”	(250mm)	10

Order no.	PolyPadL Polishing cloth for fine polishing of metals, such as stainless steel and hard steel		Pack(pcs/box)
S060701-1	8”	(200mm)	10
S060702-1	10”	(250mm)	10

Order no.	PolyPadH Polishing cloth for fine polishing of metals, such as alloy and stainless steel		Pack(pcs/box)
S060801-1	8”	(200mm)	10
S060802-1	10”	(250mm)	10

Order no.	FinalPad Polishing cloth for fine polishing of all materials		Pack(pcs/box)
S060901-1	8”	(200mm)	10
S060902-1	10”	(250mm)	10

TOP TECH

Diamond Suspension

Order no.	Monocrystalline	diamond suspension	
S0703080902	0.1um	300ml	Gray
S0703030902	1um	300ml	Blue
S0703040902	3um	300ml	Green
S0703050902	6um	300ml	Yellow
S0703060902	9um	300ml	Red

Order no.	Polycrystalline	diamond suspension	
S0708080402	0.1um	470ml	Black
S0708030902	1um	300ml	Milky
S0708030402	1um	470ml	Black
S0708040402	3um	470ml	Black
S0708050402	6um	470ml	Black
S0708060402	9um	470ml	Black
S0708070402	15um	470ml	black

Oxide and Final Suspension

Order no.	Aluminum oxide suspension	
S0707010902	0.05um	300 ml
S0707020902	0.3um	300 ml

Order no.	Final polishing suspension	
S0704C10902	0.04um	300 ml

Top Tech distributors

TOP TECH

TOP TECH MACHINES CO.,LTD

No.6-3,Siayuan Rd.,Dali,Taichung,412 Taiwan
TEL: +886-4-2406-3799 FAX:+886-4-2406-0960
E-mail:top@toptech.tw http://www.toptech.tw

Agent КОМПАНИЯ «РУСПРОМТЕХСНАБ» Дистрибьютор компании "ТОР-ТЕСН" г. Москва, Овичинниковская наб., 20 Тел.: (499) 348-11-82

E-mail: info@toptech1.ru https:// www.toptech1.ru

We reserve the right to change design without notice.

NO. EB0-BM02